ALL DIMENSIONS IN MM **220/230**

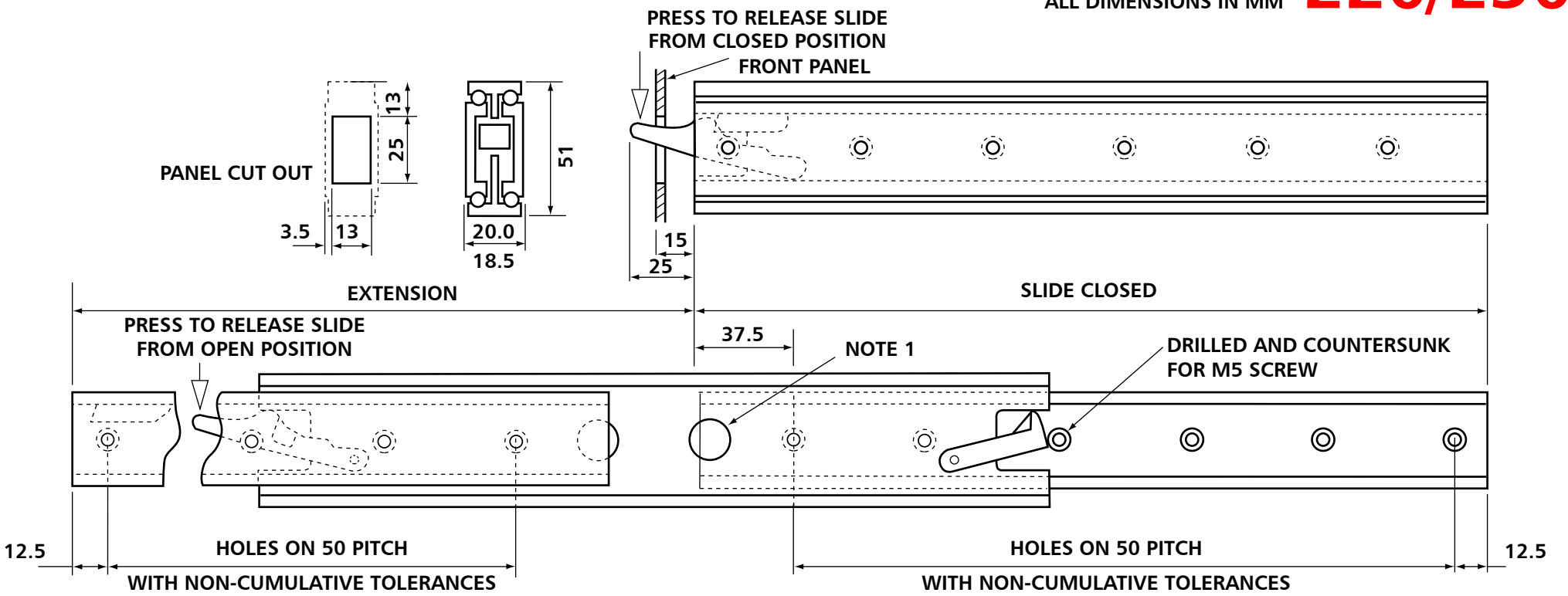


NOTE 1: 15MM DIA. HOLES IN CENTRE BEAM ALLOW EASY ACCESS TO FIXING HOLES. M5 COUNTERSUNK HEAD SCREWS TO BS4183 ARE RECOMMENDED FOR FIXING.

NOTE 2: ELONGATED HOLES SHOULD BE PROVIDED IN EITHER THE FRAMEWORK OR CHASSIS TO GIVE ADJUSTMENT IF IT IS NECESSARY FOR THE PANEL TO FIT TIGHTLY AGAINST THE FRAMEWORK.

- ALL ALUMINIUM SLIDE
- NON STANDARD SLIDES ARE AVAILABLE (CUSTOM LENGTHS/EXTENSIONS/FIXING METHODS)
- FOR APPLICATIONS COVERING SHOCK AND VIBRATION PLEASE CONTACT OUR SALES TEAM
- STANDARD LENGTHS 300MM TO 600MM IN 50MM INCREMENTS
- RoHS COMPLIANT

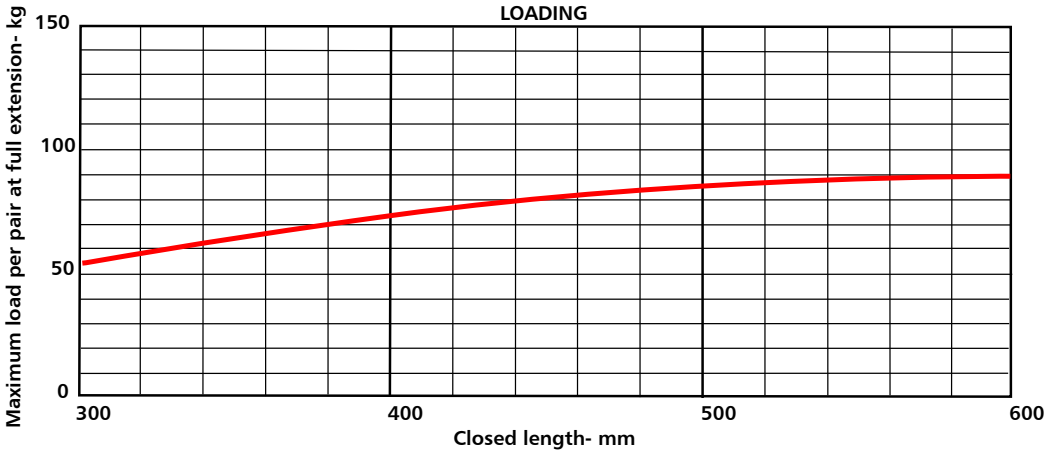


Widney Manufacturing Limited,
Plume Street, Aston, Birmingham, B6 7RX. England.
Tel: +44 (0)121 327 5500.
Fax: +44 (0)121 328 2466.
www.widney.co.uk

© Widney Manufacturing Ltd 2010