DIMENSIONS IN MM

# STANDARD BLINDS

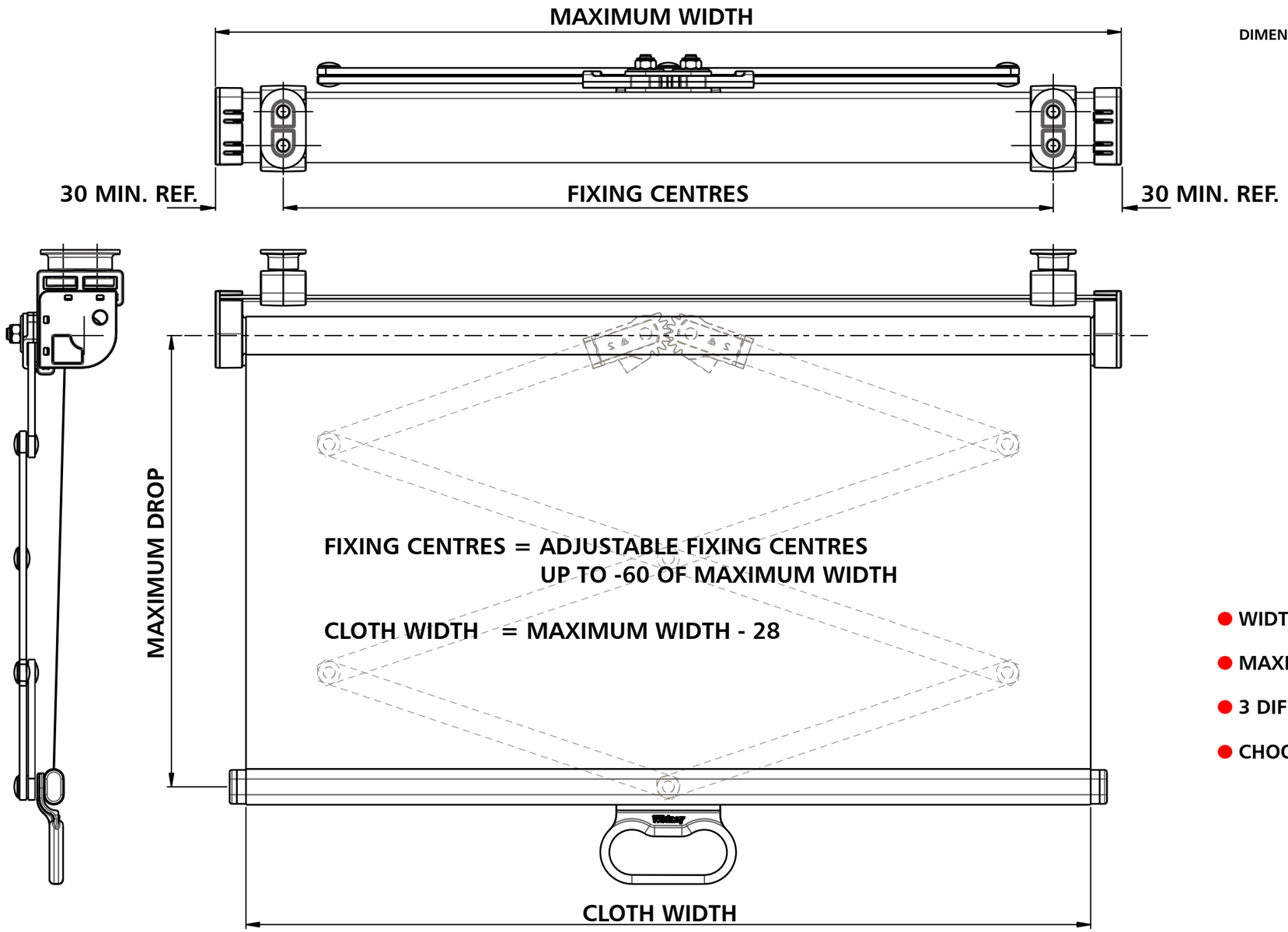


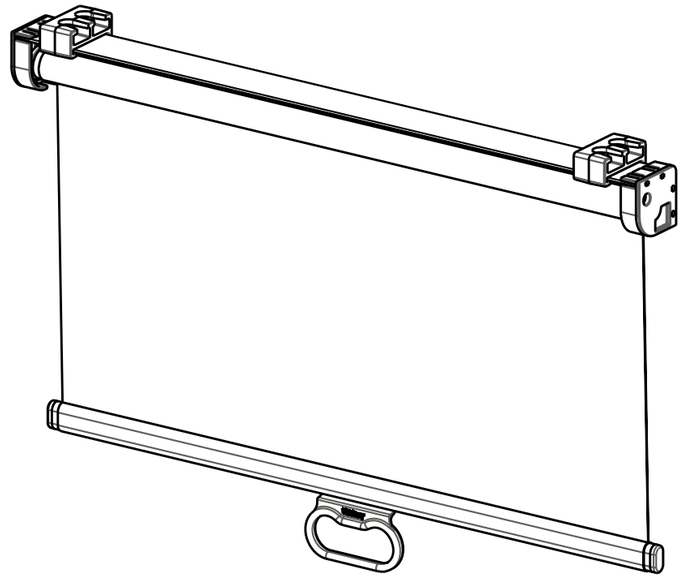

- WIDTHS 400mm – 1500mm
- MAXIMUM DROP 310 and 610mm
- 3 DIFFERENT STYLES OF PULL TAB AVAILABLE
- CHOOSE FROM A VARIETY OF FABRICS

## ROOF FIXING

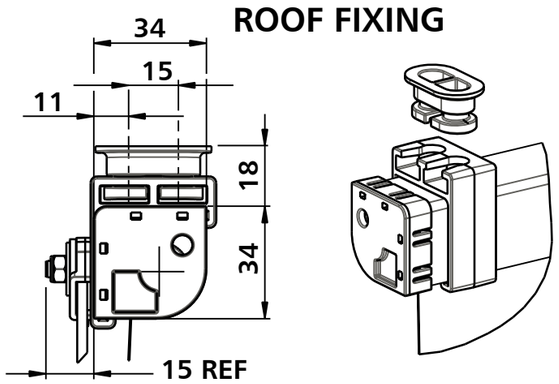


## BULKHEAD FIXING

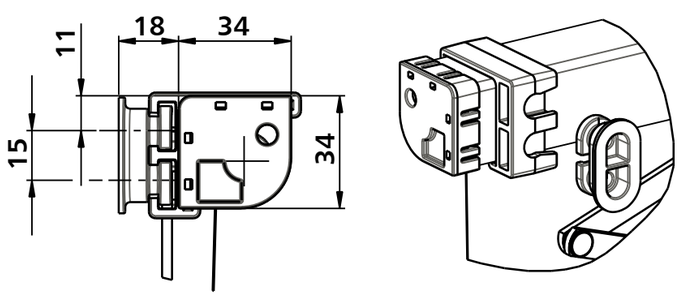


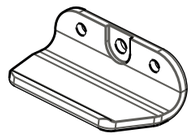

PULL TAB
83/55972

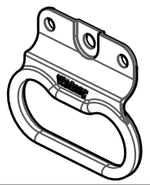

PULL TAB
83/55973

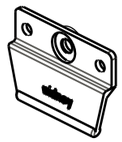

PULL TAB
83/53609

Widney Manufacturing Limited,
Plume Street, Aston, Birmingham, B6 7RX. England.
Tel: +44 (0)121 327 5500.
Fax: +44 (0)121 328 2466.
www.widney.co.uk

© Widney Manufacturing Ltd 2013